Product Code

BC1-1303-2535

90° Angled Wall Outlet

Category: 3x16A (2P+E) 4h

Technical Specifications

AMPERE	3/16A
POLE	2P+E
TENSION	110V–150V
CLOCKWISE	4h
HERTZ	50 Hz - 60 Hz
IP RATING	IP44
CONDUCTIVE MATERIAL	A.D. 58
BODY MATERIAL	Polyamide 6
GRAM	223
BOX QUANTITY	3
NUMBER OF BOXES	54

Quality Certificates

BC1-1303-2535
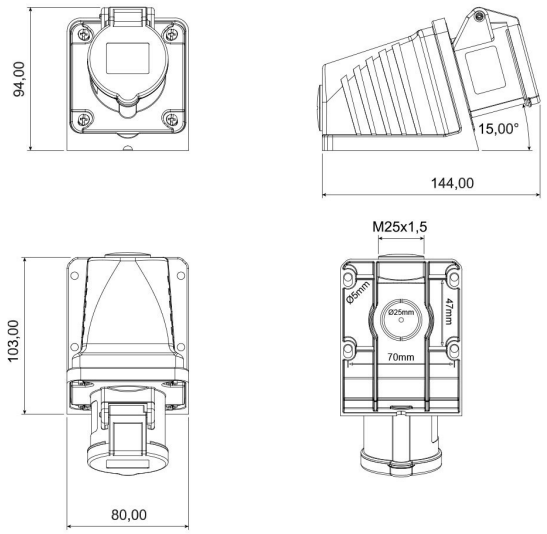
Technical Drawing